SBIR
SANTA BARBARA INFRARED, INC.
a HEICO company

Infinity Extended Area Absolute Low Temperature Blackbody Series

FEATURES

- iProbe Temperature Sensors
- Temperature Accuracy of ±0.010°C (0°C-50°C), ±0.0005 (T-25) elsewhere
- Emissivity (Average) > 0.970 (3-5.5µm), >0.950 (8-14µm)
- 98% of Set ΔT or 0.01ºC. Whichever is Greater Over 90% of Emitting Surface Area
- 0.001°C Temperature Stability
- Dry Gas Purge
- -40°C to 175°C Absolute Temperature
- Ethernet, GPIB or RS-232 Interfaces
- 4" or 8" Emitting Surface Size
- Multi-Function Controller

OVERVIEW

The SBIR Infinity EXLT Series Extended Area Absolute Low-Temperature Blackbody Source is designed for applications where temperatures below the 0°C limit of standard blackbodies must be generated. This blackbody system can achieve temperatures as low as -40°C in an uncontrolled lab environment. For applications such as low-background flood mode testing of detectors, the Model EXLT can eliminate the need for expensive and cumbersome temperature chambers or other special provisions to achieve these cold backgrounds.

A recirculating refrigerated bath cools the blackbody to approximately the desired temperature. A sophisticated electronic control system and an array of thermoelectric coolers control the blackbody surface precisely to the desired setpoint. The EXLT Series includes all of the components needed for operation: blackbody, refrigerated bath, temperature controller, cables, and hoses. Operation of the system is straightforward, and maintenance is minimal.

The EXLT Series is a low cost, easy-to-use solution for applications requiring a low temperature extended blackbody source.

AVAILABLE SIZES & TEMPERATURES

Model	Emitting Surface Size	Temp. Range C -40°C to 100°C Abs. T	Temp. Range D -40°C to 175°C Abs. T
EXLT-04	4" x 4"	X	X
EXLT-08	8" x 8"	X	X

Solutions

for Every EO Test Requirement

30 S. Calle Cesar Chavez, Suite D • Santa Barbara, Ca. 93103
ph (805) 965-3669 • fax (805) 963-3858 • http://www.sbir.com

SBIR
SANTA BARBARA INFRARED, INC.
a HEICO company

SBIR
SANTA BARBARA INFRARED, INC.
a HEICO company

Infinity Extended Area Absolute Low Temperature Blackbody Series

SYSTEM SPECIFICATIONS

Emissivity (Average)	> 0.970 (3µm to 5.5µm), >0.950 (8µm to 14µm)
Uniformity	98% of set ΔT or 0.01ºC, whichever is greater over 90% of emitting surface area
Absolute Accuracy	±0.010ºC for (0ºC <T< 50ºC) or ±0.0005 (T-25) elsewhere
Stability	σT ≤0.001ºC (0ºC to 50ºC), σT ≤0.002ºC (-40ºC to 0ºC, 50ºC to 100ºC), σT ≤0.003ºC (110ºC to 175ºC)
Display Resolution	0.001ºC or 0.0001ºC
Setpoint Resolution	0.001ºC
Selectable Ready Indicator	± 0.001ºC to ± 5.000ºC
Approximate Heating Rate[1]	+0.40ºC/sec. at 25ºC
Approximate Cooling Rate[1]	-0.20ºC/sec. at 25ºC
Settling Time	45-120 seconds

GENERAL SPECIFICATIONS

Operating Temperature	0ºC to 50ºC (Controller), -40ºC to 50ºC (Head)
Storage Temperature	-20ºC to 70ºC
Relative Humidity	5% to 95%, non-condensing
Maximum Blackbody Power Consumption	850W-1600W depending on size and temperature range
Chiller Power Consumption	1800-2000W
Approximate Blackbody Weight	EXLT-04 - 25.0 lbs., EXLT-08 - 65 lbs.
Approximate Controller Weight	15.0 lbs.
Chiller Weight	80.0 lbs.

DIMENSIONS

(inches)

Model	A Aperture	B Width	C Optical Center Line	D Height	E Depth
EXLT-04	4.04	7.00	4.50	10.56	7.00
EXLT-08	8.04	11.00	6.50	14.56	7.00

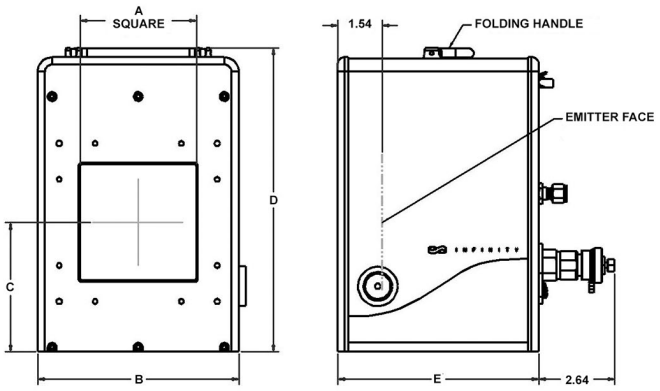

ORDER INFORMATION

Please contact the SBIR sales team at (805) 965-3669 to ensure proper part number and and to receive a quotation.

Notes: 1. Slew rates vary depending on blackbody size and environmental conditions

* Specifications are subject to change without prior notice

CE

Solutions

for Every EO Test Requirement

30 S. Calle Cesar Chavez, Suite D • Santa Barbara, Ca. 93103
ph (805) 965-3669 • fax (805) 963-3858 • http://www.sbir.com

SBIR
SANTA BARBARA INFRARED, INC.
a HEICO company