SBIR
SANTA BARBARA INFRARED, INC.
a HEICO company

RTB3000 Detector Test Bench

OVERVIEW

The RTB 3000 Detector Test Bench from Santa Barbara Infrared is a flexible, integrated IR detector test station for evaluation of single element detectors, linear arrays, and focal plane arrays. The RTB 3000 provides the radiometric stimulus necessary to perform accurate IR detector testing in both laboratory and production environments.

The SBIR system is designed to be integrated with most data acquisition systems to perform the automated tests and analysis required for complete detector characterization. Alternately, the RTB 3000 can interface with the user's own detector support electronics to perform detector testing and analysis.

The blackbody sources and optics of the RTB 3000 are designed to be quickly and accurately reconfigured for flood-mode, focused-mode and collimated-mode testing. Tests such as MTF, crosstalk, spot scan, and D* are easily performed with excellent accuracy and repeatability.

The RTB 3000 allows rapid set up and simple documentation of the test configuration, yielding accurate, consistent test results. This integrated approach removes many of the errors associated with set up and alignment of multiple test configurations.

Solutions

for Every EO Test Requirement

30 S. Calle Cesar Chavez, Suite D • Santa Barbara, Ca. 93103
ph (805) 965-3669 • fax (805) 963-3858 • http://www.sbir.com

SBIR
SANTA BARBARA INFRARED, INC.
a HEICO company

FOCUS MODE TESTS

In focused-mode tests, the RTB 3000 focuses energy from an infrared-illuminated aperture or target onto individual pixels of the detector. Typical focused-mode tests include crosstalk, spot scan and MTF. The optical system of the RTB 3000 allows focused-mode testing to be performed with either the high temperature cavity blackbody or the low temperature extended area source.

Tests include: Crosstalk, Spot Scan and Modulation Transfer Function. Configurations for Focus Mode Testing are shown below for your convenience.

FOCUS MODE CONFIGURATIONS

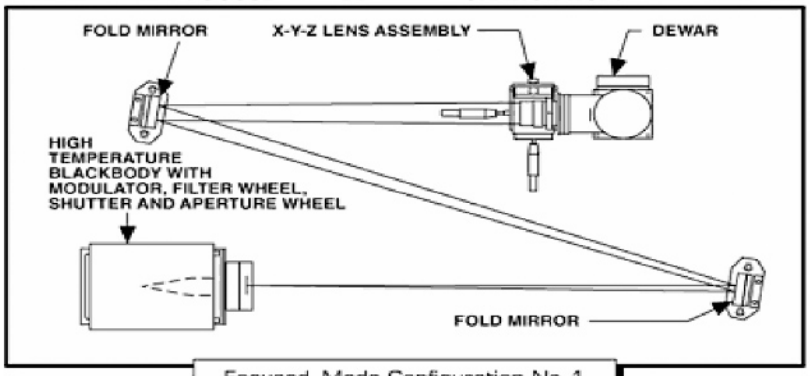

Focused–Mode Configuration No. 1

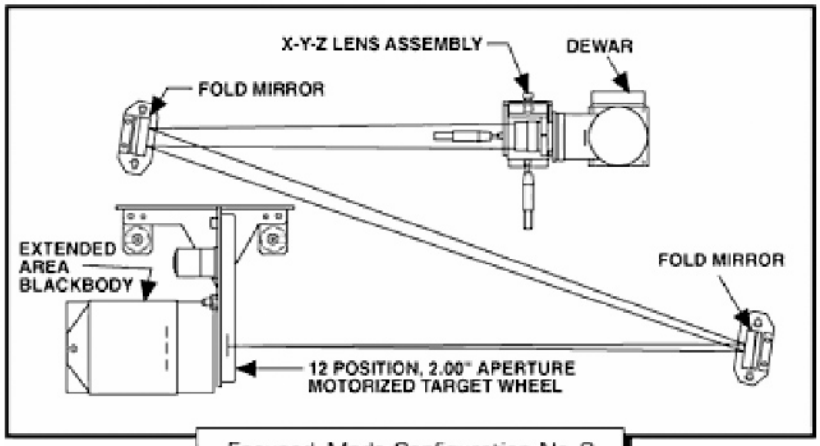

Focused–Mode Configuration No. 2

30 S. Calle Cesar Chavez, Suite D • Santa Barbara, Ca. 93103
ph (805) 965-3669 • fax (805) 963-3858 • http://www.sbir.com

FLOOD MODE TESTS

In flood-mode tests the RTB 3000 illuminates the detector with unfocused blackbody energy from either the extended area source or the high temperature cavity source. Flood-mode tests include responsivity, noise, uniformity, detectivity, and linearity. Source location is precisely established using the RTB 3000's graduated optical rail and quick-change kinematic mounts, for accurate control of irradiance.

Tests include: Responsivity, Noise, Uniformity, Detectivity and Linearity. Configurations for Flood Mode Testing are shown below for your convenience.

FLOOD MODE CONFIGURATIONS

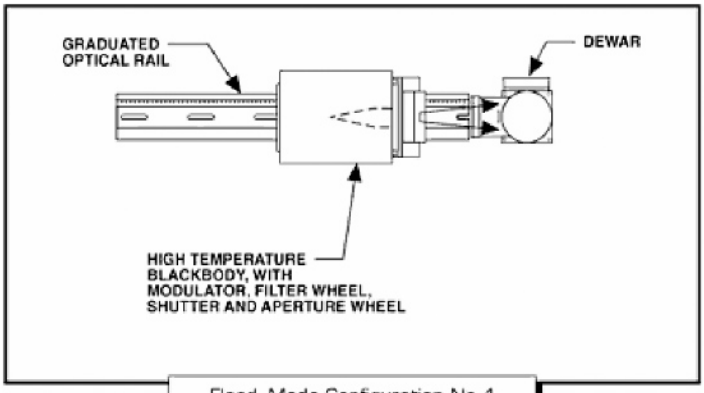

Flood-Mode Configuration No. 1

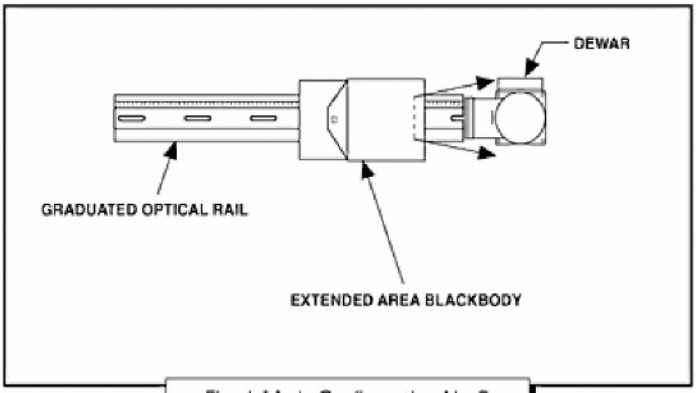

Flood-Mode Configuration No. 2

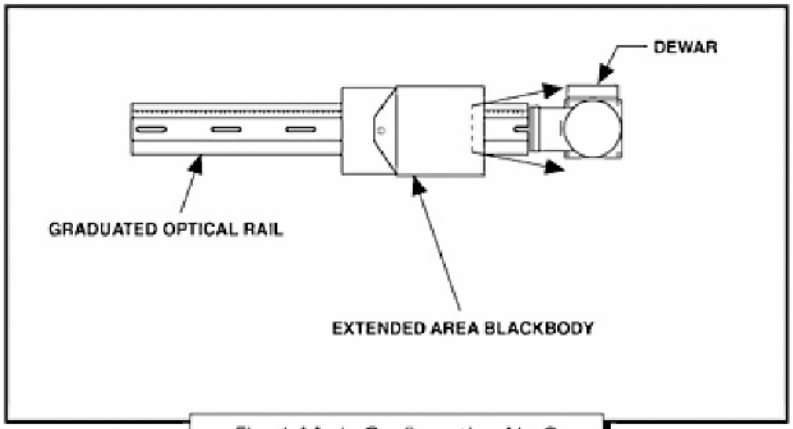

Flood-Mode Configuration No. 2

30 S. Calle Cesar Chavez, Suite D • Santa Barbara, Ca. 93103
ph (805) 965-3669 • fax (805) 963-3858 • http://www.sbir.com

COLLIMATED MODE TESTS

The tests describe previously in flood mode and focus mode are done on detectors or systems that do not form an image. The capability of the RTB 3000 is easily extended to allow testing of imaging systems: a collimating mirror is added, illuminating the imaging system with collimated energy from the differential blackbody source and target wheel or the cavity source and aperture wheel. This allows routine measurement of MTF, SiTF, NETD, and MRTD at the system level, and eliminates the need for a separate IR target projector system.

Tests include: Auto MRTD, SiTF, MTF and NETD. Configurations for Collimated Mode Testing are shown below for your convenience.

COLLIMATED MODE CONFIGURATIONS

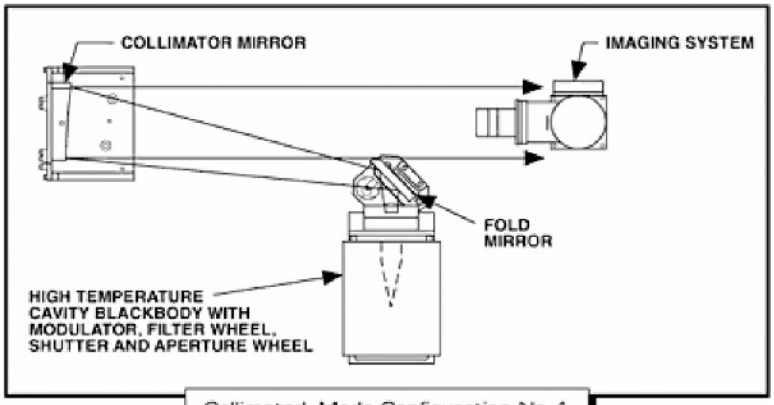

Collimated-Mode Configuration No. 1

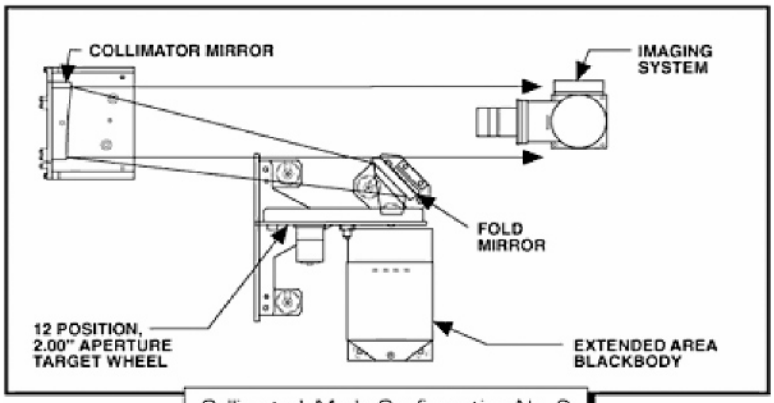

Collimated-Mode Configuration No. 2

30 S. Calle Cesar Chavez, Suite D • Santa Barbara, Ca. 93103
ph (805) 965-3669 • fax (805) 963-3858 • http://www.sbir.com

SBIR
SANTA BARBARA INFRARED, INC.
a HEICO company

RTB3000 Detector Test Bench

SPECIFICATIONS

Standard System - The base system of the RTB 3000 IR Detector Test Bench is capable of performing all of the common focused and flood-mode tests necessary to characterize IR detectors, linear arrays, and focal plane arrays.

COMPONENT	FEATURES
Optical Bench.....	30" x 60", Quick-change kinematic mounts, fold mirrors, graduated optical rails
High Temperature Blackbody.....	50 - 1000ºC, 1" Ø aperture; microprocessor control; IEEE-488 Interface
Chopper / Modulator.....	1 - 1000 Hz standard; stop-open, stop-closed; IEEE-488 Interface
Shutter.....	2 position, IEEE-488 Interface
Filter Wheel.....	5 position, 1" Ø aperture; IEEE-488 Interface. Aperture diameters of .050", .100", .200", .400", and .600" are standard. Other sizes are available
Extended Area Blackbody.....	4" square aperture, 0ºC to 100ºC (-25ºC to 75ºC ΔT) standard; microprocessor control; IEEE-488 Interface
Sliver Mirror.....	Flat micro mirror on movable stage assembly
X-Y-Z Lens Stage.....	1 inch travel, 3 axis; microprocessor control; IEEE-488 Interface; Stage lens mount for standard focusing lens
Focusing Lens.....	100mm EFL, f/3, 3-5 micron; and/or 100mm EFL, f/2, 8-12 micron

OPTIONAL COMPONENTS

By incorporating optional components, the RTB can be expanded to support system level testing.

Target Wheel.....	2" Ø aperture, 12 position; IEEE-488 Interface. Standard FLIR test targets available
Collimator.....	6" diameter, 30" EFL off-axis parabolic primary mirror; plano fold mirror
Extended Area Blackbody.....	The standard 4" square aperture extended area blackbody can be replaced with a 6" square aperture blackbody to support large aperture flood-mode testing

* Specifications are subject to change without prior notice

Solutions

for Every EO Test Requirement

30 S. Calle Cesar Chavez, Suite D • Santa Barbara, Ca. 93103
ph (805) 965-3669 • fax (805) 963-3858 • http://www.sbir.com

SBIR
SANTA BARBARA INFRARED, INC.
a HEICO company