MIRAGE: System Overview and Status

Richard Robinson, Jim Oleson, Lane Rubin, and Steve McHugh
Santa Barbara Infrared, Inc. 312 N. Nopal Street, Santa Barbara, CA 93103

ABSTRACT

Santa Barbara Infrared's (SBIR) MIRAGE (Multispectral InfraRed Animation Generation Equipment) is a state-of-the-art dynamic infrared scene projector system. Imagery from the first MIRAGE system was presented to the scene simulation community during last year's SPIE AeroSense 99 Symposium. Since that time, SBIR has delivered five MIRAGE systems. This paper will provide an overview of the MIRAGE system and discuss the current status of the MIRAGE. Included is an update of system hardware, and the current configuration. Proposed upgrades to this configuration and options will be discussed. Updates on the latest installations, applications and measured data will also be presented.

Keywords: Infrared, Scene Simulation, Scene Projection, and Emitter Array

1. MIRAGE OVERVIEW

MIRAGE is a complete turn-key infrared scene projector system with Command and Control Electronics (C&CE), Digital Emitter Engine (DEE), Thermal Support Subsystem (TSS), and Calibration Radiometry Subsystem (CRS). Optional MIRAGE subsystems include a Real-time Image Playback System (RIPS) and a custom Projection Optics Subsystem (POS) tailored to a customer's specific application. A block diagram illustrating the interconnection of these MIRAGE subsystems is presented in figure below.

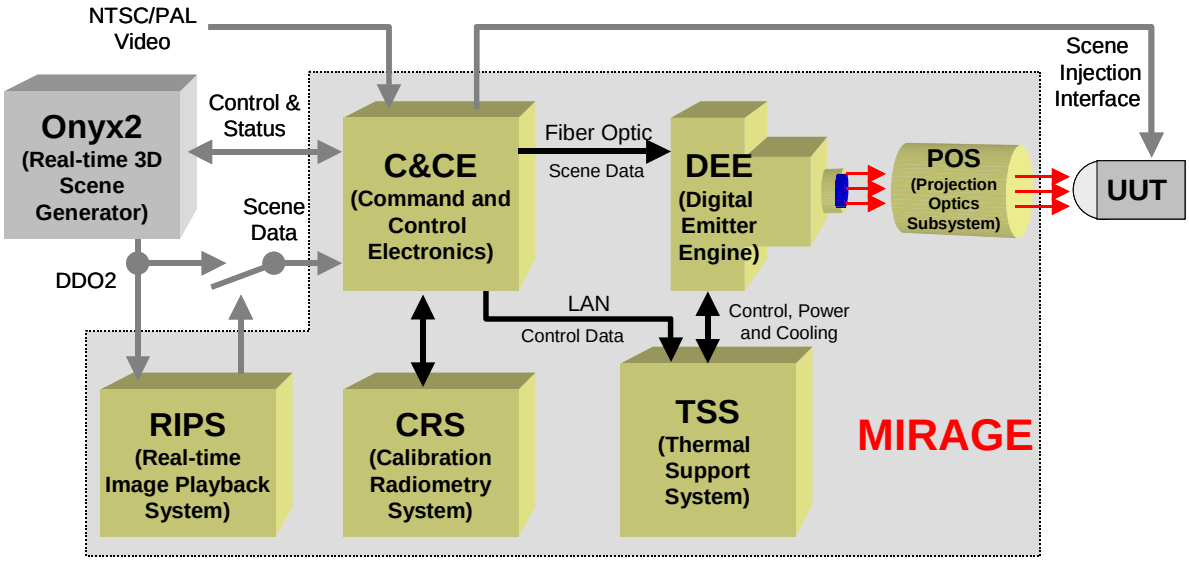

MIRAGE Subsystems Shown in Gray Box

At the heart of MIRAGE is a 512x512 emitter array, employing key innovations that solve several problems found in previous designs. The read-in integrated circuit (RIIC) features both rolling-update (raster) and "snapshot" updating of the entire 512x512 resistive array. This solves the synchronization problems inherent in "rolling-update" only type designs. The MIRAGE custom mixed-signal RIIC accepts 16-Bit digital scene information at its input and using on-board D/A converters and individual unit-cell buffer amplifiers creates accurate analog scene levels. This process eliminates the complexity, noise and speed/dynamic range limitations associated with external generation of analog scene levels. With the

additional benefits of a hybrid fabrication process, high thermal stability, and a 200Hz update rate, MIRAGE is the most advanced dynamic infrared scene projector system available. A description of each of the MIRAGE subsystems and their advanced features is provided in the following sections.

1.1 Digital Emitter Engine (DEE)

The MIRAGE Digital Emitter Engine, with its 512x512 micro-emitter array, is the most technologically advanced component of the MIRAGE Scene Projector. The emitter array is constructed of thermally isolated suspended thin film resistor structures fabricated on an advanced sub-micron silicon read-in integrated circuit (RIIC). Several innovations designed into the micro-emitter array make MIRAGE the most advanced turnkey scene projector system available in the world. The emitter is packaged in a custom vacuum package. The DEE interfaces to a custom high performance optical system, specifically tailored to each customer's application. Careful design considerations result in a compact DEE weighing approximately 7.3 kg (16 lbs) with dimensions of 22.9 cm (9 inches) in diameter by 30.5 cm (12 inches) in length. The base of the DEE contains a kinematic mount allowing optical alignment in five axis as well as easy removal and replacement without optical realignment. All electrical and mechanical connections to the DEE are via quick-connect devices to facilitate removal of the DEE for calibration purposes. The MIRAGE dewar is designed for long vacuum hold times (i.e. weeks to months between vacuum pump-downs) therefore eliminating the need for vacuum pumps or vacuum lines on a flight motion simulator.

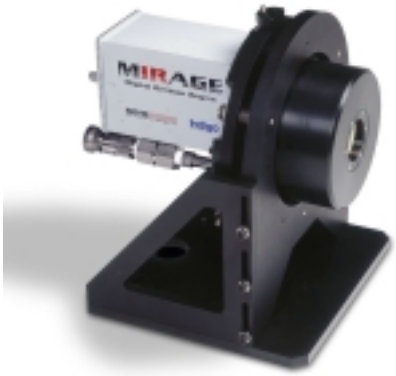

DEE Mounted in an Optics Bench Stand

1.1.1 Emitter Array

The micro-emitter array is fabricated using a proprietary hybrid approach that eliminates constraints normally encountered during the fabrication of emitters onto silicon substrates. Rockwell Science Center pioneered this approach, Transfer Thin Film Membrane (TTFM). The TTFM process allows for the use of a wide variety of emitter and leg materials and high processing temperatures not compatible with silicon substrates. The emitters are bulk annealed prior to hybridization, producing resistors that are very stable both mechanically and electrically. The resulting emitters have excellent short-term and long-term thermal stability and are thermally well isolated from the silicon read-in integrated circuit (RIIC.) This thermal isolation allows operation over a wide temperature range with low power dissipation, and results in a thermal time constant of 4.6 msec to support up to 200 Hz frame rates. The mechanical configuration of the emitter array preserves the maximum real estate on the silicon RIIC below each emitter, yet provides a fill factor of 46%.

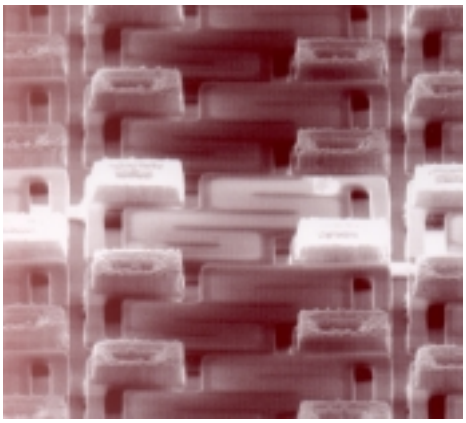

MIRAGE Micro-Emitter Structure

1.1.2 Read-In Integrated Circuit

Several of the innovations in the MIRAGE design are centered on the read-in integrated circuit (RIIC), the foundation of the emitter array. The RIIC is a new design that draws on advanced focal plane read-out design techniques[1]. This state-of-the-art custom design features a sophisticated, low-power digital interface and low-noise operation. This design also provides MIRAGE with the lowest electrical crosstalk available.

High yields are realized by using advanced, Class 1 clean room, commercially available .6 micron CMOS processing for RIIC fabrication. This is a proven process used extensively in IR focal plane array electronics manufacturing. These RIICs are processed on 8” wafers that hold 44 512x512 die per wafer. To date, six wafers have been fabricated with an RIIC yield of 87%.

1.1.2.1 Snapshot Update

Emitter array designs to date sequentially update the analog level in each unit cell; as soon as each pixel’s signal level is presented to the RIIC, that level is immediately transferred to the emitter. This has the effect that during the time a new image is being read into the array, different emitters on the array will be changing intensity and settling to new levels at different times. At low frame rates, this significantly limits the amount of time that a settled, unchanging image can be presented to a unit-under-test, as shown in the figure below.

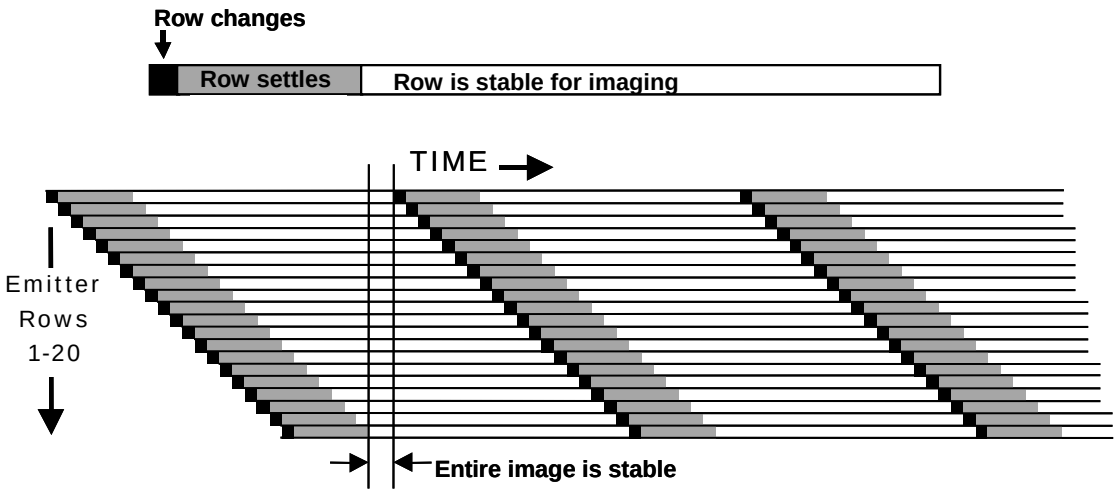

Operation of a theoretical 20-row rolling read-in emitter array at relatively low frame rate. Note the short time period during which each image is stable on the array.

As the frame rate increases, the period when the entire image is stable disappears completely, as shown in the figure below.

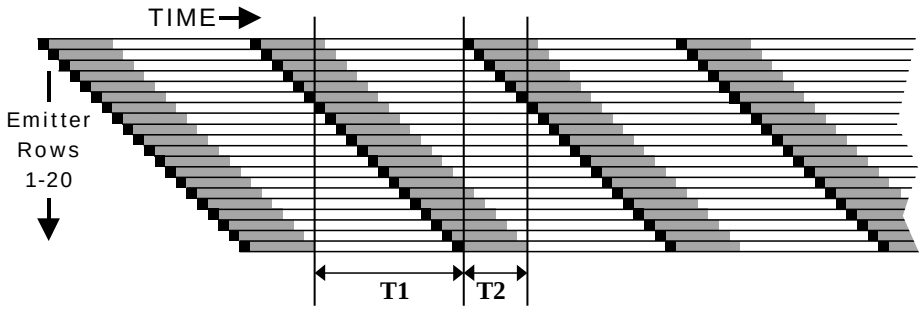

Operation of the 20-row rolling read-in emitter array at a higher frame rate. Note that there is no time when the emitter array is presenting a stable image.

Note that at any instant during time period T1, the lower rows of the emitter are still displaying intensities from the previous frame, even as the intensities from the current frame are reading in and settling. During time period T2, even as the lower rows of the “current” frame are still settling, levels on the upper rows are already changing to display the data from the next frame. Thus, although this example system may be able

to read in scene data at higher frame rates, there is no time during which the unit-under-test can observe an unchanging, settled image.

To eliminate this constraint on higher-speed operation, the RIIC for the MIRAGE emitter array uses a "snapshot" architecture. All pixels on the emitter array change and settle simultaneously, maximizing the time during which the displayed image is stable - even at the highest frame rate - and greatly simplifying the task of synchronizing the scene simulator to the unit-under-test.

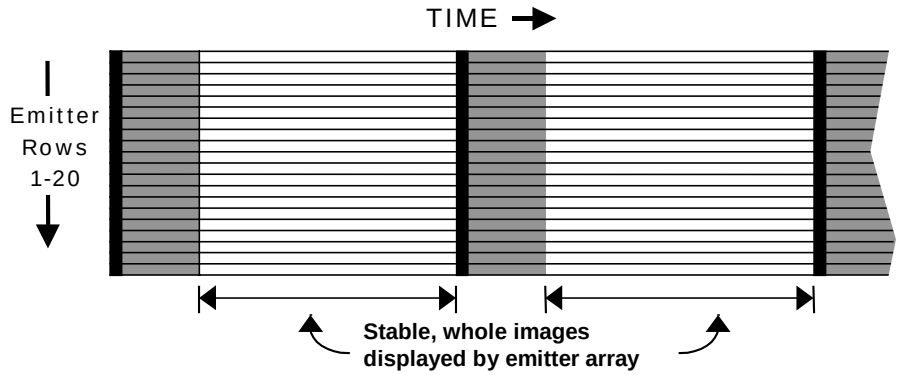

Operation of the snapshot emitter array. All pixels update simultaneously, leaving the maximum possible time for a stable image to be observed by the system-under-test.

Even as the frame rate increases to its maximum value, all pixels will continue to update and settle simultaneously. The snapshot update feature of the MIRAGE array guarantees that image data from different frames will never overlap, as happens with rolling mode arrays.

1.1.2.2 On-Board D/A conversion and unit-cell buffer

Another significant innovation in the MIRAGE design is the integration of D/A converters (DACs) into the RIIC. Scene projector designs to date have transferred scene intensities to the emitter array using analog inputs; in order to support reasonable refresh rates, multiple analog inputs are used - in some cases as many as 32 or 64. Each input requires an external, precision, high-speed analog source - usually specialized DAC modules - adding to system complexity; the associated cabling and interconnects compromise signal fidelity and noise performance. As emitter array formats get larger, the size and complexity of this external support electronics must grow rapidly in order to maintain reasonable refresh rates. These analog electronics tend to be bulky and must be mounted closely to the emitter array, greatly increasing the mass on the Flight Motion Simulator.

To eliminate these constraints, the MIRAGE RIIC has two on-board, high-speed, precision DACs. These two DACS update the left and right halves of the array and are simultaneously driven by two 16 bit digital busses. This results in a robust, high fidelity digital signal path from the external scene generator electronics to the emitter array. The entire data path from the C&CE to the emitter array is 16-bits wide, allowing for fast and accurate processing of the digital scene information.

During the read-in of a new image to the emitter array, digital scene data for each row is loaded from the dual 16-bit digital busses into the DACs on the RIIC. The resulting analog levels are then transferred to the unit cells for that row. The RIIC on-chip DACs, operating at 26 MHz, support digital input rates greater than 28 Mega-words per second on each channel, allowing the entire array to be updated in 5 ms (frame rate of 200 Hz).

The pixel unit cell resistor drive circuit is specifically designed to mitigate the effects of mixed-signal (digital and analog) ASIC noise, and to provide excellent (40dB) emitter power supply noise rejection. This power supply rejection capability - localized at each unit cell - along with triple-level metal layers in the RIIC for uniform current distribution, minimizes the output noise and maximizes the dynamic range of the MIRAGE scene simulator.

1.1.2.3 High Thermal Stability Features

The RIIC incorporates several features that are currently being patented. These features greatly increase thermal stability of the array. Scene dependent non-uniformities, caused by thermal and electrical effects in the emitter and the substrate, are virtually eliminated. These features are:

- Utilizing the emitter substrate as the ground plane - This technique runs the power from the emitter pixels vertically through the substrate to the base of the substrate. By utilizing the base of the substrate as the ground plane, bussbar robbing and electrical crosstalk typical of emitter arrays is eliminated. This also increases the available real estate for the input power bus. This approach provides a more robust design for both the supply and ground planes and greatly enhances scene uniformity and stability.
- Voltage Drive - With current-mode drive, the emitter temperature increases as the fourth power of the input signal. In contrast, with voltage-mode drive the emitter temperature increases as the square of the input signal. As a result, more resolution is available across the temperature range. With the fourth order response, too many bits are used for the low range (bits are lost in noise) while too few bits are available for the balance of the range. Voltage drive provides for higher usable resolution across the range.
- Constant Current Operation - The MIRAGE RIIC incorporates two load paths in the unit cell that keeps the total power dissipated in the unit cells constant. The input current is either directed to the emitter or to the shunt path. This approach eliminates electrical crosstalk in the positive power supply. Constant power dissipation allows the two-stage temperature controlled heatsink assembly to be very thermally stable.

1.2 Thermal Support Subsystem (TSS)

The MIRAGE TSS is a service unit to the DEE, providing thermal control and power for the emitter array. With the C&CE, the environmental parameters are monitored, providing full system and component protection from unacceptable power, thermal and vacuum values. This subsystem is connected to the DEE with quick connect fittings and connectors, allowing for rapid removal and replacement of the DEE on the flight simulator table or optical bench. Control of the TSS is through the System Controller PC (part of the C&CE).

MIRAGE Thermal Support Subsystem

Substrate temperature control and uniformity are key elements in the quality of the resulting projected scene. A proprietary control loop design uses feedback from the signal processor in the DEE Close Support Electronics (CSE) and from temperature sensors at the emitter array to actively control the substrate temperature within precise limits. The state of the art SBIR Model 920 “Smart” Temperature Controller is implemented for this precision control function.

The TSS also houses high stability power supplies and bias supplies used to run the IR emitter array. All of the above components are housed in a roll-around 19-inch electronics rack for convenient placement in the vicinity of the flight simulator table. Coolant lines, fiber optic and electrical power lines are attached to the TSS via quick-connects; allowing the TSS to be moved away from the UUT without removing cabling from the flight simulator. An additional set of cables will be provided so that the DEE and TSS can be operated on an optical bench or on a calibration bench.

1.3 Command and Control Subsystem (C&CE)

The Command and Control Electronics (C&CE) is the signal processor for the MIRAGE Scene Projector. The C&CE has two major electronic subassemblies, the System Controller PC and the VME based signal

processor. SBIR has selected Comptek-Amherst Systems Inc. as its supplier for a portion of the VME based processing system. This system is capable of the high data rates and complex algorithm execution needed to provide infrared projections for state-of-the-art testing. The C&CE receives rendered scene data from the user scene generation source and drives the micro-emitter array in the DEE. The C&CE sends all of the required commands to the TSS and receives calibration information from the CRS for seamless operation.

The C&CE is built around a commercial power PC array running in the VME chassis and is commanded by a System Controller PC via a Bit 3 interface. The System Controller PC, running Windows NT, monitors and controls subsystems via serial communication links and controls the micro-emitter array via the high-speed signal processing subsystem. The signal processing electronics receives rendered scene data from the user's scene generation computer (e.g., Onyx2) or from the Real-time Image Playback System (RIPS), buffers the scene data as necessary, provides non-uniformity correction, time constant enhancement (overdrive), and then supplies an output stream of digital image data to the micro-emitter array. The time constant enhancement algorithm, named the Overdrive Circuit, is a proprietary approach incorporated by SBIR that effectively decreases the rise time of the emitter array electrically, without changing thermal mass or increasing the heat load.

MIRAGE C&CE - System Controller PC & VME Scene Processing Electronics

The MIRAGE processing electronics implement a "pixel overdrive" algorithm to improve rise time after a commanded temperature change. Rather than relying on the natural rise time of the pixel to move the temperature to its setpoint, extra power is briefly applied to the pixel to accelerate the temperature change. The following description, while greatly simplified, outlines the principles of pixel overdrive.

With no overdrive, a pixel would reach 63% of its setpoint temperature in 1 time constant. If the pixel is driven to approximately 158% of the change in setpoint (not of the setpoint, but of the change in setpoint), then in one time constant it will reach the new setpoint temperature (within some tolerance). After one time constant, the drive power is set back to its steady state value, to prevent the temperature from rising above its desired setpoint. The following figure shows this concept graphically. The same principle is used to enhance fall times for a commanded temperature decrease.

With pixel overdrive implemented, the term "time constant" becomes ambiguous in describing settling time, since we are no longer looking at a simple curve. A more descriptive term would be "rise time." With overdrive, rise time (0%-90% or 100% -10%) will be equal to one frame period: 5ms for 200Hz operation

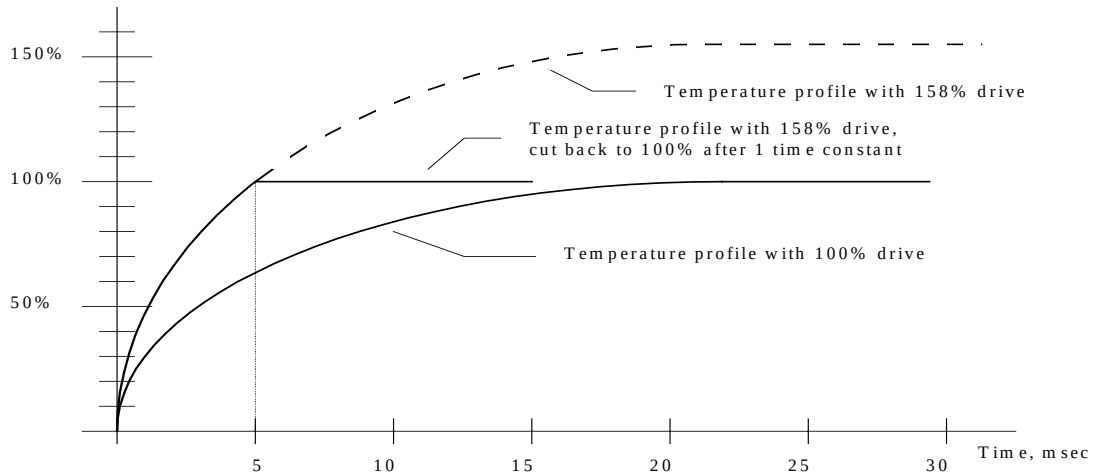

Pixel Overdrive Utilized to Dramatically Improve Pixel Rise and Fall Times

There are limitations to using overdrive. A large change to a temperature near the limit (either high or low limit) will not have available overhead to allow creation of the overdrive signal. This will not be a problem for small changes from one temperature near the limit to another temperature near the limit. For most activity within the dynamic range of the device, pixel overdrive will yield significant enhancement of settling times.

MIRAGE is designed with low latency in mind; in raster mode the C&CE does not need to buffer a full frame of scene data before producing processed emitter output, reducing system latency to a minimum of 49 microseconds from frame input trigger to frame projection.

Rendered scene data from the user's scene generation computer or the RIPS enters the signal processing subsystem through a multi-port I/O module, allowing MIRAGE to be configured to accept both analog and digital data in standard formats including: SGI DDO2, PAL and NTSC. Custom formats can be available by a simple replacement of the I/O module. The emitter data output is provided as a duplex optical fiber using a proprietary high-speed interface. This interconnect allows for very long distances between the C&CE and the DEE with no signal degradation. The output to the DEE is also routed to a standard VGA output for viewing of the projected scene on a computer monitor. Finally, the C&CE provides control and synchronization input and output signals to allow synchronization of scene generation and projection with the operation of the unit under test.

1.4 Calibration Radiometry System (CRS)

The MIRAGE CRS is a highly automated radiometric measurement system, which automatically calibrates the infrared radiation from each pixel of the array. It includes a 320 x 240 MWIR camera, reference blackbodies, optics and positioning mechanics to control the camera's view of the micro-emitter array. The excellent stability and performance of this radiometric system provides superior performance for non-uniformity correction and calibration. Calibration of the MIRAGE system uses a fully automated, proprietary "step/stare/scan" method, combining image software "micro-scanning" and mechanical "macro-scanning" techniques along with advanced data collection, correlation, and reduction algorithms. Automation of the calibration process reduces the need for operator interaction and enhances the repeatability of the process.

The CRS includes a table top optics bench mounted on a double-wide electronics chassis, a calibration stand with DEE mount, MWIR camera, microscope lens, electro-mechanical positioners, two precision blackbodies with controllers, and data acquisition hardware. Our approach to calibration allows a universal calibration system to be used on many types of MIRAGE array installations, thereby reducing overall cost and system complexity. A photograph of a CRS is shown below. The MIRAGE CRS nonuniformity data collection and calibration process is described in detail in an earlier paper in these proceedings[2].

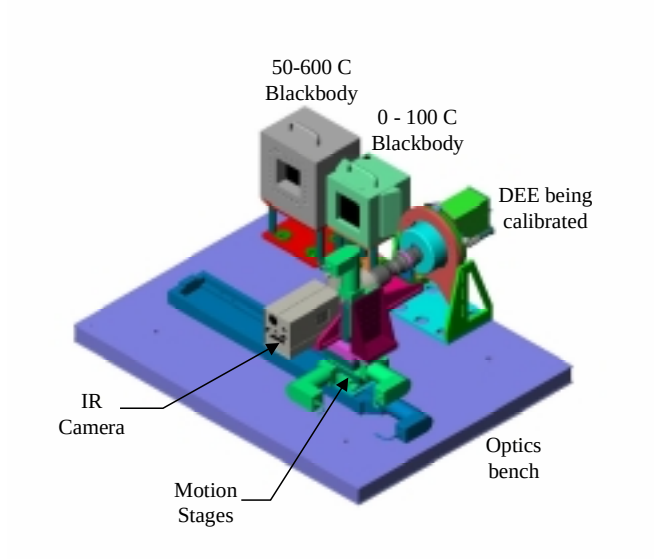

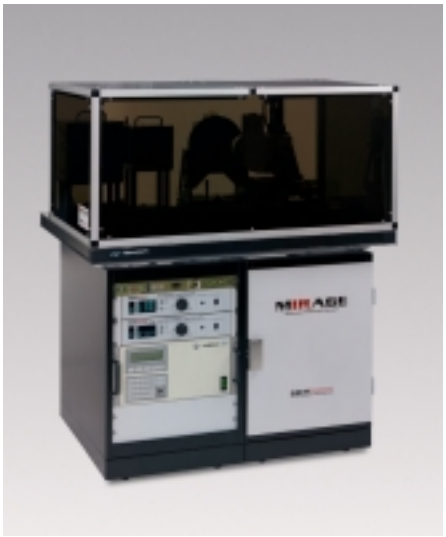

CAD Drawing & Photo of MIRAGE CRS

1.5 Real-time Image Playback System (RIPS)

The optional RIPS is a stand-alone low cost PC based image capture and playback system. The RIPS accepts real-time (or slower than real-time) input images in a wide range of digital image formats, including the Silicon Graphics DDO2 format, and stores those images on a high-speed fiber channel disk array for later image playback and analysis. The RIPS consists of a standard dual processor Pentium III PC, a COTS high-speed data I/O board, a COTS fiber channel disk array and controller, a custom DDO2 input/output board, and setup and control software. The RIPS provides the following functionality:

- Capture DDO2 input images from an SGI Onyx2 and store the images on the disk array while simultaneously passing the DDO2 images through to another device (i.e. projector, UPI, UUT, etc.)
- Reads digital image sequence files transferred from another computer over Ethernet and stores them on the disk array for later image playback
- Provides a playback utility to allow the user to display the images to the PC monitor for analysis or for selection of a playback sequence
- Playback utility also allows the user to playback any sequence of images from the disk array to the DDO2 output port in real-time synchronized to an external user supplied frame sync (e.g., from the SUT/UUT)
- User can setup and control the complete RIPS from another computer over the standard Ethernet interface between the PC and the user's computer.

The key specifications for the RIPS are:

- Maximum DDO2 input/output rate: 50 Mbytes/sec (e.g. 512x512 images at 100 Hz)
- Disk array storage capacity: 144 Gbytes
  = 49 minutes of 512x512 images at 100 Hz,
  = 81 minutes of 512x512 images at 60 Hz,
  = 163 minutes of 512x512 images at 30 Hz.

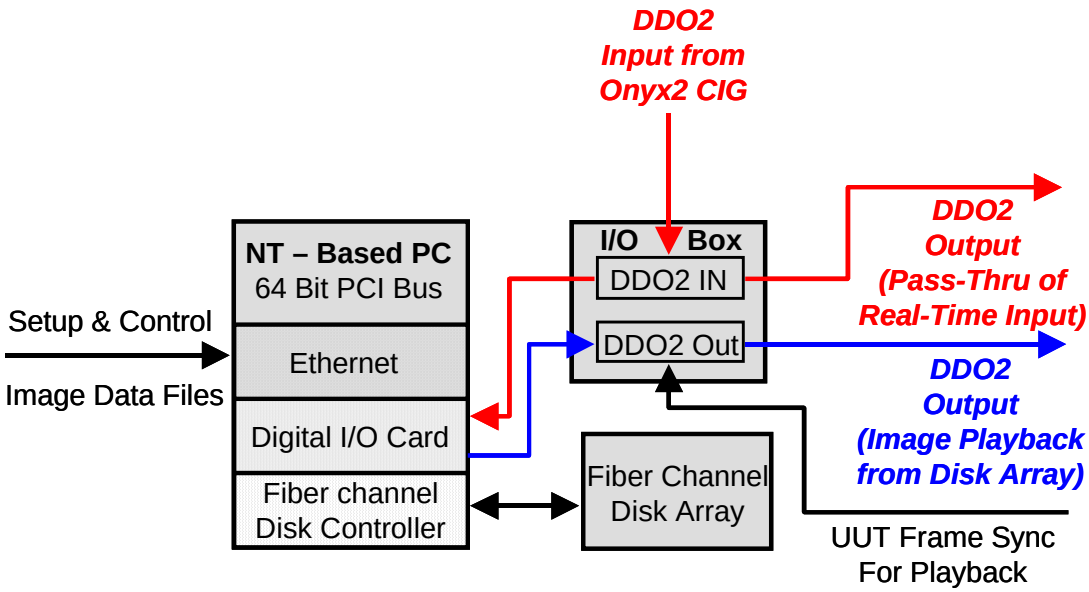

RIPS Architecture

1.6 Projection Optics Subsystem (POS)

The Infrared Projection Optics are designed to meet the requirements of each customer application. The projection optics can be designed to be used in a stationary projection system on an optics table or designed to be mounted to the outer axis of a 5-axis flight motion simulator via an adapter plate assembly as shown in the figure below. The photograph below is a fixed focal length MWIR collimator that SBIR delivered with a MIRAGE for testing the AIM-9X missile on a 5-Axis FMS. The kinematic mount between the DEE and POS allows the DEE to be removed for calibration or optics bench use and then reattached to the collimator without the need for realignment.

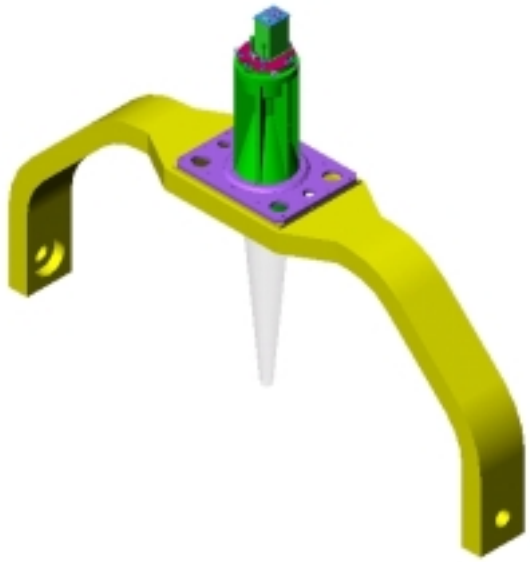

Isometric View of a Typical MIRAGE collimator and DEE on the outer axis of the FMS

2. MIRAGE Status

The first imagery taken from a MIRAGE array was shown during the AeroSense 99 Symposium last year[3]. Several process improvements have been made since those first arrays. As a result, the latest mating of CMOS and emitters yielded arrays with outstanding uniformity, sensitivity, and operability (> 99.92%). While detailed performance data on these arrays is unavailable at this time, a complete MIRAGE projector system utilizing one of these arrays will be demonstrated at the AeroSense 2000 Symposium. This fully operational MIRAGE demonstration system consists of a Digital Emitter Engine with the latest emitter array, Thermal Support Subsystem, Command & Control Electronics, and various scene input sources, including DDO2 digital scenes from an Oynx2 scene generator and NTSC video input from a camera, VCR, and computer. The input/output images provided below were captured from this MIRAGE system utilizing an Indigo 320x240 InSb MWIR thermal imager. Each camera pixel is imaging approximately four projector pixels, so the images appear somewhat blurred. You may contact SBIR to receive a CD-ROM containing the latest MIRAGE papers, briefings, output images, output video, and performance data.

Input Images (Tank & Palm Trees)

Corresponding 512x512 MIRAGE Output Images (Imaged by a 320x240 InSb MWIR Imager)

The MIRAGE system was developed as a commercial infrared scene projector product with internal capital funding furnished by the MIRAGE development team The time line presented in the figure below shows the progression of the MIRAGE development and the delivery of the first five MIRAGE systems. Of the first twelve MIRAGE systems sold to date, four (33%) have been purchased by international customers. MIRAGE, a truly world class infrared projection system, is being integrated into a wide range of sensor test applications, including:

- Hardware-in-the-loop Missile Seeker testing for air-to-air, ground-to-ground, ground-to-air, and stand-off attack missile systems,
- Target Acquisition / Forward Looking Infrared (FLIR) sensor testing in the laboratory and installed on host aircraft,
- Missile Warning System sensor testing in the laboratory and installed on host aircraft.

The compact size, light weight, rugged design, and separation distance from the drive electronics (>1km) of the DEE makes the MIRAGE the ideal choice for these diverse test configurations. To support these test applications MIRAGE systems are presently being mounted on 5-Axis flight motion simulators, optics benches, helicopters, and fighter aircraft. Other MIRAGE mounting configurations are also being investigated.

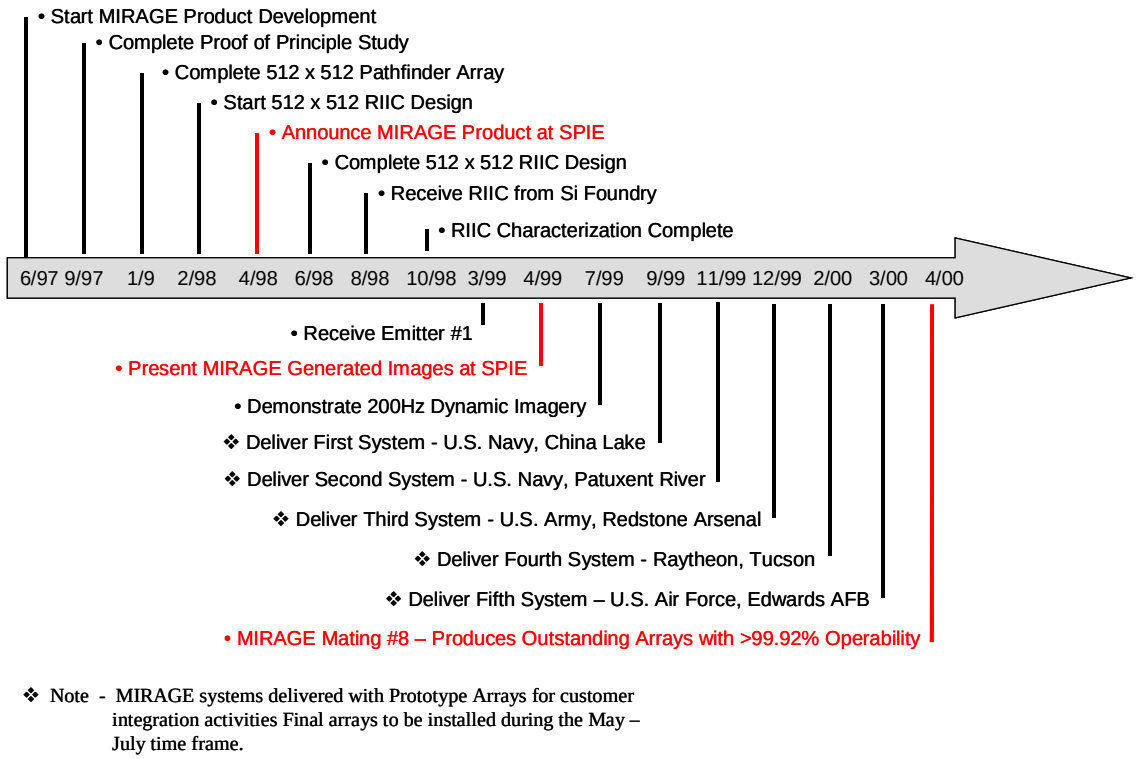

❖ Note - MIRAGE systems delivered with Prototype Arrays for customer integration activities Final arrays to be installed during the May – July time frame.

MIRAGE Development and Delivery Timeline

With the engineering development phase for the standard MIRAGE giving way to the full scale manufacturing production phase, SBIR is now turning its engineering focus to product improvements in the emitter arrays and to the development of the next generation of larger format emitter arrays. As described in these same proceedings[4], SBIR and Indigo Systems, Inc., the designers of the MIRAGE arrays, have already completed the design studies for these next generation emitter arrays. Plus, under contract to the U.S. Navy, Indigo Systems and SBIR are nearing completion of the architecture definition and system level design for the next generation of high bandwidth scene projector image processing and drive electronics. This electronics system will provide up to 400 million pixels per second of scene input bandwidth from a scene generator and up to 200 million pixels per second of image output to the large format arrays.

In support of its continued commitment to developing and marketing the most advanced state-of-the-art infrared scene projectors in the world, SBIR recently added a Scene Simulation Division. This division is focusing on customer scene simulation applications, including: MIRAGE installation, training, and application development support, complete scene simulator systems development, hardware-in-the-loop simulation system development, and development of MIRAGE projector options. One of these MIRAGE option is an Infrared Counter Measure (IRCM) projector for combining high temperature dynamic IRCM (i.e., flares, jammers, etc.) with the MIRAGE projector on an optics bench. The IRCM projector can project up to six independently controlled IRCM sources at apparent MWIR temperatures up to 2000K. When optically combined with the high fidelity target and background scenes from the MIRAGE, the resulting infrared scene and countermeasure projector (IRSCMP) system is ideal for testing ground-to-air and air-to-air missile systems.

4. SUMMARY

The MIRAGE system is a complete turn-key dynamic infrared scene projector system. Its advanced state-of-the-art design has made it the projector of choice for a wide range of demanding infrared sensor test applications. As more performance data from these applications becomes available, SBIR will continue to make it available to the infrared sensor test community.

5. REFERENCES

1. T.R. Hoelter, B.A. Henry, J.H. Graff, and N.Y. Aziz, "MIRAGE Read-in Integrated Circuit Testing Results", *Technologies for Synthetic Environments: Hardware-in-the-loop Testing IV*, Proceedings SPIE Vol. 3697, pp. 163-171, (1999).
2. A. Irwin, J. Oleson, and Richard Robinson, "MIRAGE: Calibration and Radiometry System", *Technologies for Synthetic Environments: Hardware-in-the-Loop Testing V*, Proceedings SPIE Vol. 4027, (2000).
3. Steve McHugh, Jon Warner, Mike Pollack, Alan Irwin, Ted Hoelter, Bill Parrish, and Jim Woolaway, "MIRAGE Dynamic IR Scene Projector Overview and Status", *Technologies for Synthetic Environments: Hardware-in-the-loop Testing IV*, Proceedings SPIE Vol. 3697, pp. 209-222, (1999).
4. S.W. McHugh, B. Parish, J.T. Woolaway, "MIRAGE: Large-Format Emitter Arrays 1024x1024 and 1024x2048", *Technologies for Synthetic Environments: Hardware-in-the-Loop Testing V*, Proceedings SPIE Vol. 4027, (2000).

CORRESPONDENCE

For more information please contact: Richard Robinson, Santa Barbara Infrared, Inc. Telephone: 805-965-3669; Fax: 805-963-3858; e-mail: rrobinson@sbir.com